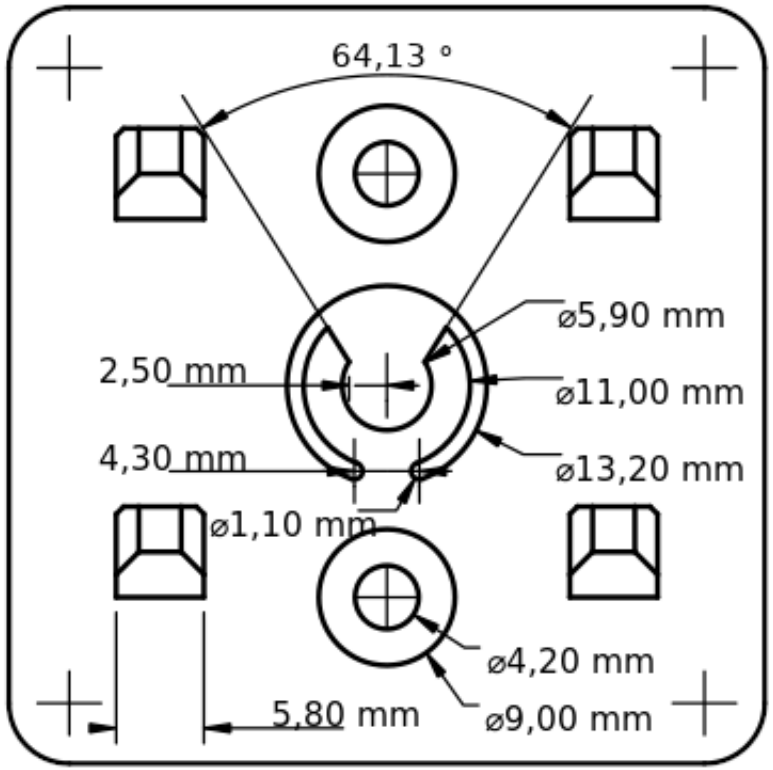

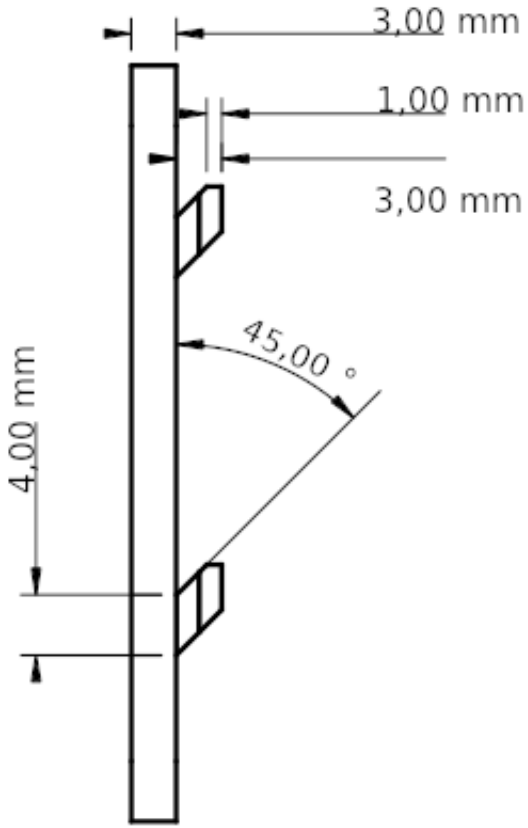

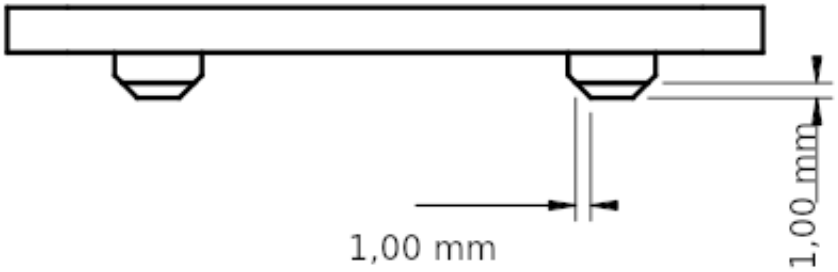

DESIGNED BY: Eric Schlötke DATE: 04.02.2019		Quick-release plate for screwing -	
SIZE A4			
SCALE 2:1	WEIGHT (kg) Weight	DRAWING NUMBER 3	SHEET 1/4

This drawing is our property; it can't be reproduced or communicated without our written consent.