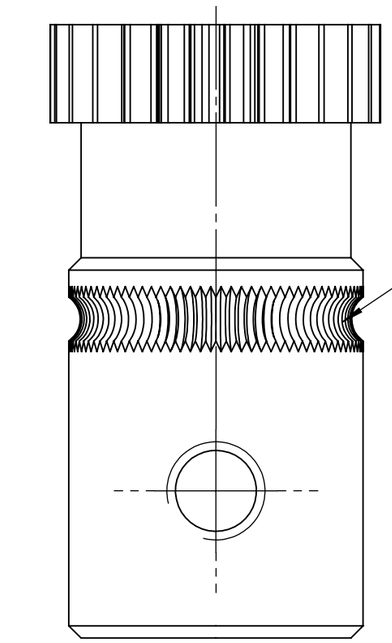

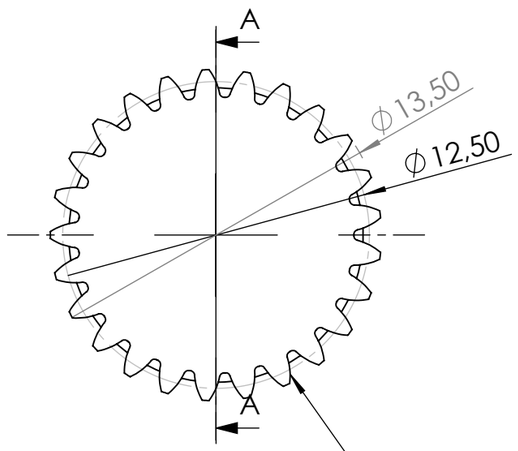

Module 0.5
25 Teeth
20 deg. pressure angle

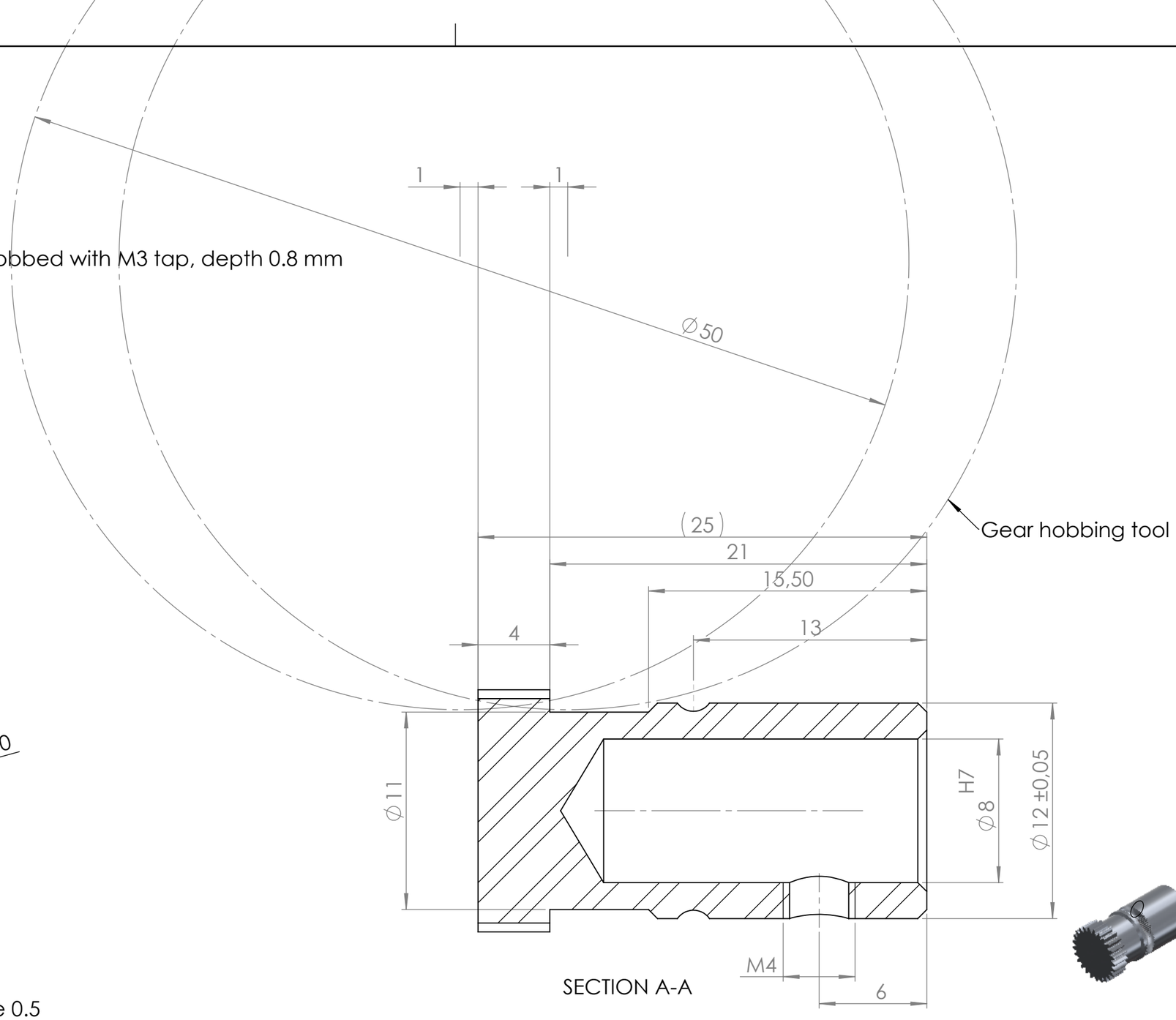

SECTION A-A

SCALE 1 : 1

Pos	Qty	Material	Type.number /Blank Dim	Article no/Reference
1	1	SS1914		

Konstruerad av / Design by	Ritad av / Drawn by	Granskad av / Checked by	Granskad för produktion / Checked for production	Datum / Date	General tolerance / SS-ISO 2768-1,-2	General surface roughness	Vyplacering / Projection method	Skala / Scale
								4:1

Vikt/Weight	Description
17,59 gr	Drivewheel with Gear

Benämning: Drivhjul med kugg

BONDTECH

Artikelnummer/Article number	Ritningsnummer/Drawing number	Utgåva/Revision	Blad/Sheet
	100-104	B	1(1)

This work is licensed under the Creative Commons Attribution-NonCommercial-ShareAlike 3.0 Unported License.
To view a copy of this license, visit http://creativecommons.org/licenses/by-nc-sa/3.0/ or send a letter to Creative Commons, PO Box 1866, Mountain View, CA 94042, USA.

A3